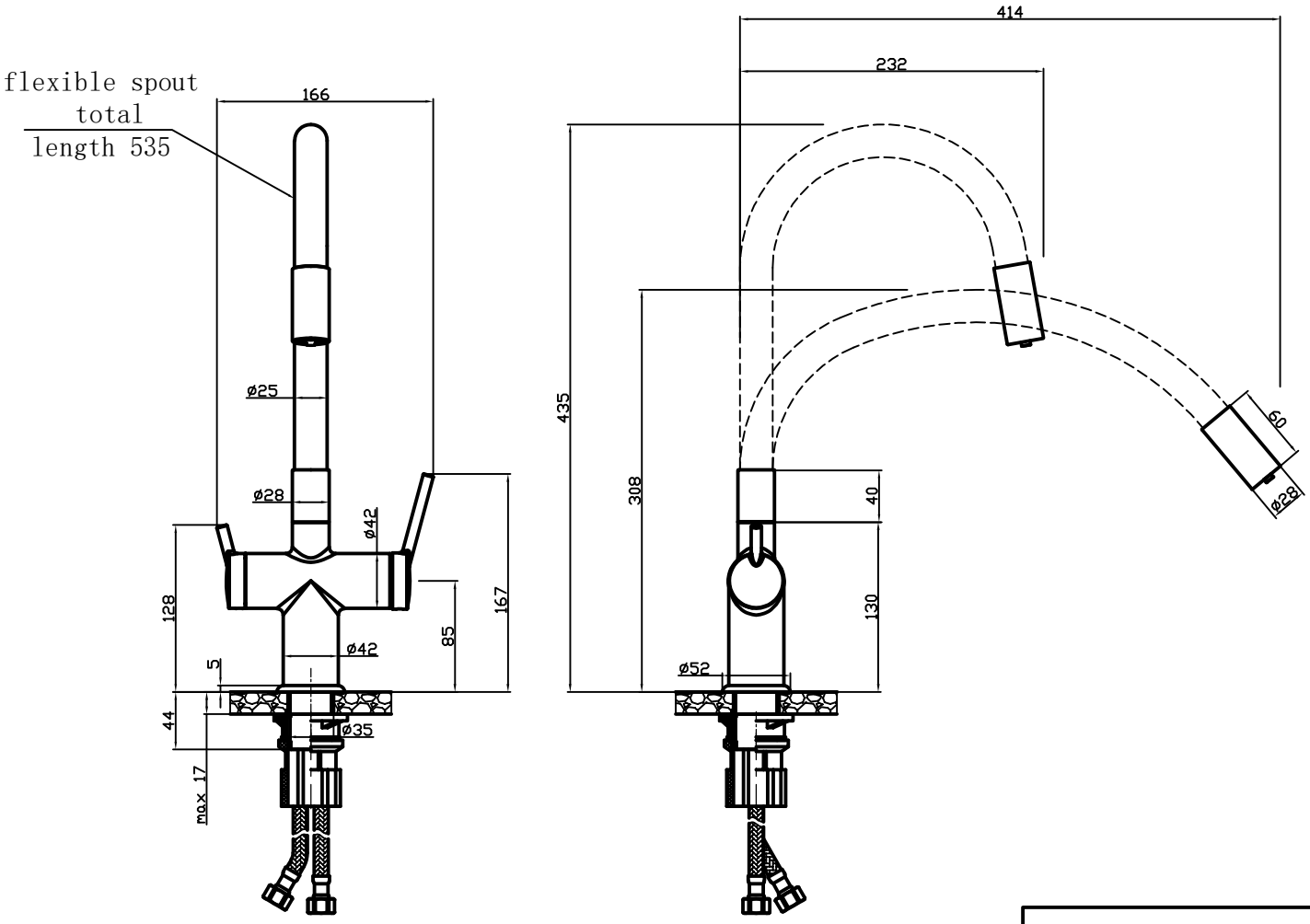
flexible spout
total
length 535
166
ø25
ø28
ø42
128
167
85
ø42
5
44
ø35
max 17
414
232
435
308
40
130
ø52
60
ø28

BFT41B